LINE 57B MP 2.02 & 3.39
TILT METER REPLACEMENT
ON McDONALD AND BACON ISLAND
COUNTY OF SAN JOAQUIN

BTU AREA X-07
WALL MAP 3001
PLAT A-4 & B-2
SAN JOAQUIN COUNTY

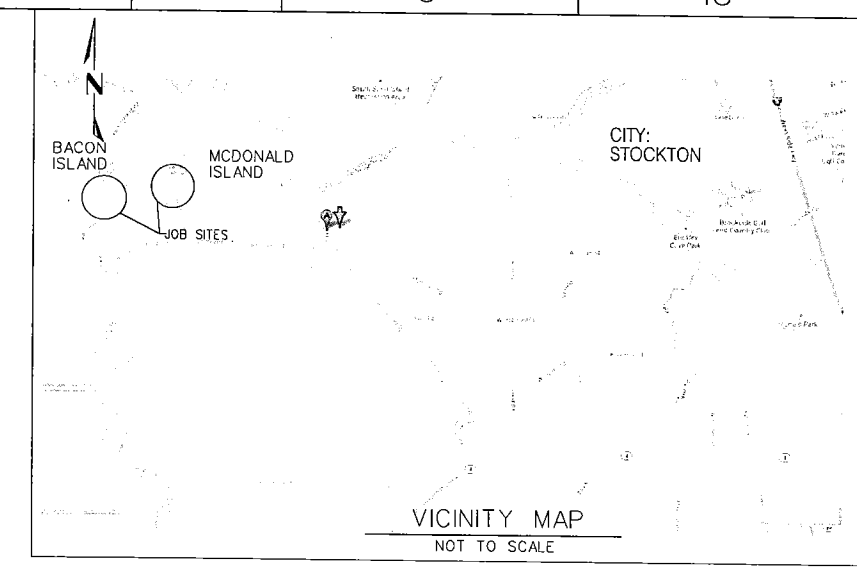

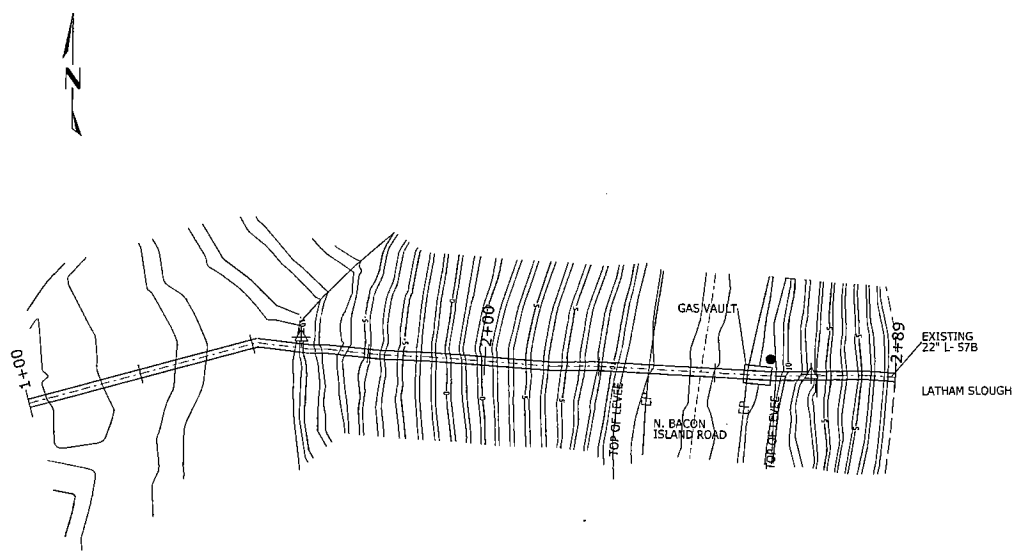

LEVEE ON EAST BACON ISLAND L-57B MP 3.39
NTS (REFER TO SH4)

SCHEDULE OF SHEETS

SHEET 1 -- COVER SHEET
SHEET 2 -- PIPELINE CONSTRUCTION DRAWINGS (PLAN AND PROFILE)
SHEET 3, -- CONSTRUCTION DETAILS FOR McDONALD ISLAND
SHEET 4, -- TYPICAL DETAILS / BILL OF MATERIALS

SAFETY

SAFETY PLEDGE

I ALWAYS PUT SAFETY FIRST.
I LOOK FOR AND ACT TO RESOLVE UNSAFE SITUATIONS.
I HELP AND ENCOURAGE OTHERS TO ACT SAFELY.

PRELIMINARY
SKETCHES FOR PERMIT REQUEST

REGISTERED PROFESSIONAL ENGINEER
WESLEY GROTHER GRAY
M34879
EXP.
MECHANICAL
STATE OF CALIFORNIA

REFERENCE DRAWINGS:

384388 - - - - OPERATING MAP
179810 - - - - PIPELINE INSTALL JOB

CUSTOM DESIGNED BY:
GAS TRANSMISSION ESTIMATING & DESIGN

NOTE:

WARNING: CONFIDENTIAL, PROPRIETARY INFORMATION
THIS DOCUMENT CONTAINS CONFIDENTIAL, PROPRIETARY INFORMATION THAT IS THE SOLE PROPERTY OF PACIFIC GAS AND ELECTRIC COMPANY AND IS INTENDED FOR USE ONLY BY AUTHORIZED PACIFIC GAS AND ELECTRIC COMPANY EMPLOYEES & AGENTS. COPYRIGHT PACIFIC GAS AND ELECTRIC COMPANY.

NO.	DATE	DESCRIPTION	GM/SPEC	DWN	CHKD	SUPV	APVD BY
1	- -	ISSUED FOR PERMITTING ONLY	30950574	MDGR	RAMA		

REVISIONS

PSRS* 28168

APPROVED BY	
JN	30950574
SUPV	
DSGN	M. GOODWIN
DWN	M. GOODWIN
CHKD	R. MINGES
OK	
DATE	9/13/2013
SCALES	AS SHOWN

- COVER SHEET
LINE 57B MP 2.02 & 3.39
TILT METER REPLACEMENT
ON McDONALD AND BACON ISLAND

PACIFIC GAS AND ELECTRIC COMPANY
SAN RAMON , CALIFORNIA

MICROFILM	
BILL OF MATL	SHEET 8
DWG LIST	SHEET
SUPSDS	
SUPSD BY	
SHEET NO.	1 OF 4 SHEETS

30950574 1

SUMMARY OF PROPOSED WORK:

1. REMOVE EXISTING PITS IN LEVEES
2. REMOVE EXISTING TILT METER BRACKETS FROM PIPELINE.
3. EXCAVATE (3) BELLHOLES
4. INSTALL (6) NEW TILT METERS AND MOUNTING BRACKETS.
5. RECOAT THE EXPOSED PIPE.
5. INSTALL (3) NEW CONCRETE PITS.
6. BACKFILL.

CONTACT INFORMATION:

PROJECT MANAGER ---- RICK LODWICK 925-244-3032
PROJECT ENGINEER (PED) ---- NEIL FLEMMER 925-979-8575
PIPELINE ENGINEER (PLE) ---- KIMBERLEE LEONARD 916-386-5343
ESTIMATOR / DESIGNER ---- MATT GOODWIN 925-244-3239
FIELD ENGINEER ---- JOHN OCCHIPINTI 408-891-3082
DISTRICT SUPERVISOR ---- MIKE McFARLING 209-944-1411
T&R SUPERVISOR ---- DAVE DURHAM 209-932-6555

SEQUENCE OF OPERATIONS

OPERATING MAP •384388

1. REMOVE EXISTING VAULTS
2. EXCAVATE (3) 6'x8'-6"x7' BELL HOLES.
3. REMOVE EXISTING TILT METER BRACKETS, WRAP, AND CLEAN PIPE.
4. INSTALL NEW TILT METER MOUNTING BRACKETS WITH EPOXY.
5. INSTALLL NEW TILT METERS.
6. RECOAT THE PIPE.
7. MANUALLY MEASURE THE ANGLE OF THE ELBOW BY TAKING MEASUREMENTS AT EACH TILT METER MOUNTING PLATE AND RECORD MEASUREMENTS.
8. INSTALL NEW TILT METERS, AND MEASUREMENT CABLES IN NEW PVC CONDUIT RUNNING FROM TILT METERS TO G-5 BOXES ADJACENT TO VAULTS. NOTE PARTICULAR CARE SHOULD BE TAKEN TO WEATHERPROOF CONNECTORS AS MUCH AS POSSIBLE BY USING CAPS, DIALECTRIC, GREASE, HEAT SHRINK TUBING ON BACK OF CONNECTORS, ETC.
9. INSTALL NEW 4'x6'-6"x3' DEEP CONCRETE PITS AND LIDS. USE TRAFFIC RATED LID ON BACON ISLAND VAULT.
10. BACKFILL AND COMPACT IN ACCORDANCE WITH RECLAMATION DISTRICT SPECIFICATIONS.

Installation Tested or Inspected and Noted on Drawing. All Levels Satisfactory per PG&E GS&S 0-16

Qualified Employee _____ Date _____

Corrosion mechanic's signature is required when a CPA boundary is within the scope of the project

ENVIRONMENTAL ISSUES

☒ NONE APPARENT (IF PROJECT DESIGN CHANGES, CONTACT RESPONSIBLE ENGR)

☐ PERMITS ☐ TAILBOARD ☐ OTHER

☐ APPLICANT DESIGN/RESPONSIBILITY (CHECK PERMITS BOX IF PERMIT CONDITIONS APPLY TO PG&E ACTIONS)

BY: _____
Signature, name, [Corporate ID], date

DESIGN & CONSTRUCTION REVIEW FOR INTERNAL CORROSION

DESCRIPTION	ACTION SELECTED	INITIAL	DATE
CORROSION ENGINEER HAS REVIEWED THIS LOCATION AND THERE IS NO KNOWN THREAT OF INTERNAL CORROSION. NO INTERNAL CORROSION DESIGN OR CONSTRUCTION CONSIDERATIONS ARE NECESSARY.			
INTERNAL CORROSION MAY BE A THREAT AND THE CONSTRUCTION DESIGNS HAVE BEEN REVIEWED WITH CORROSION ENGINEERING. DOCUMENTATION OF THE REVIEW AND ACTIONS TAKEN ARE IN THE JOB PACKAGE AND INCORPORATED IN THIS DESIGN.			

DIRECT BURIAL COATING SELECTIONS
LISTED IN ORDER OF PREFERENCE

MAIN LINE COATING	FBE
MINOR REPAIRS	PROTAL 7200, POWERCRETE J
TIE-IN WELDS	PROTAL 7200, POWERCRETE J
GIRTH WELDS	PROTAL 7200, POWERCRETE J
BUTT WELDED FITTINGS	PROTAL 7200, POWERCRETE J
VALVE ASSEMBLIES	PROTAL 7200, POWERCRETE J
SHORT SEGMENTS OF PIPE	PROTAL 7200, POWERCRETE J
AIR-TO-SOIL TRANSITIONS	DEVGRIP 238, POWERCRETE J
PRESSURE CONTROL FITTINGS BODY	PROTAL 7200
FLANGE	WAX TAPE

BORED COATING SELECTIONS
LISTED IN ORDER OF PREFERENCE

MAIN LINE COATING	ARC APPLIED OVER FBE
MINOR REPAIRS	PROTAL 7200, POWERCRETE J
GIRTH WELDS	PROTAL 7200, POWERCRETE J

NOTES:

1) CONTACT THE RESPONSIBLE PIPELINE ENGINEER TO REQUEST A VARIANCE FROM THE ABOVE COATING SELECTIONS

2) ALL COATINGS ARE TO BE APPLIED IN ACCORDANCE WITH GS&S E-30 AND E-35

LEGEND:

- PROPOSED GAS LINE
- EXISTING GAS LINE
- GAS MAIN TO RETIRE
- —E— ELECTRIC LINE
- —T— TELEPHONE LINE
- TIE-IN WELD
- EXISTING TOWER
- ELECTRIC VAULT
- GAS LINE MARKER
- GAS VALVE
- WATER VALVE
- (W) WATER METER
- TREE
- TEL VAULT
- SD STORM DRAIN
- SEWER MANHOLE
- CITY/COUNTY MON
- AS NOTED
- FENCE
- (E) ETS
- TV CABLE TV BOX
- COMM VAULT
- -EP- EDGE OF PAVEMENT
- -FC- FACE OF CURB
- -SD- STORM LINE
- -SS- SEWER LINE
- -GS- GAS SERVICE LINE
- -W- WATER LINE
- (T) TELEPHONE MANHOLE
- T TELEPHONE BOX
- STREET LIGHT BOX
- PG&E PG&E MANHOLE
- MANHOLE
- (V) GAS VENT
- (CTS) COUPON TEST STATION
- (ETS) ELECTROLYSIS TEST STATION
- R POLE-MOUNTED RECTIFIER
- (A) DEEPWELL ANODE

"H" PIPELINE HORIZONTAL STA
"P" PIPELINE FOOTAGE
B/M ITEM NO.
(NOTE: B/M ITEM NO. FOR FITTINGS SHOWN ON SURVEY PLAN.
B/M ITEM NO. FOR PIPING SHOWN ON PIPELINE STATIONING.)

SAFETY

SAFETY PLEDGE

I ALWAYS PUT SAFETY FIRST.
I LOOK FOR AND ACT TO SOLVE UNSAFE SITUATIONS.
I HELP AND ENCOURAGE OTHERS TO ACT SAFELY.

PRELIMINARY

REGISTERED PROFESSIONAL ENGINEER WESLEY GROTHER CRAIG M34879 EXP. MECHANICAL STATE OF CALIFORNIA

NOTE:
WARNING: CONFIDENTIAL, PROPRIETARY INFORMATION
THIS DOCUMENT CONTAINS CONFIDENTIAL, PROPRIETARY INFORMATION THAT IS THE SOLE PROPERTY OF PACIFIC GAS AND ELECTRIC COMPANY AND IS INTENDED FOR USE ONLY BY AUTHORIZED PACIFIC GAS AND ELECTRIC COMPANY EMPLOYEES & AGENTS. COPYRIGHT PACIFIC GAS AND ELECTRIC COMPANY.

NO.	DATE	DESCRIPTION	GM/SPEC	DWN	CHKD	SUPV	APVD BY
1	- -	ISSUED FOR CONSTRUCTION	30950574	NDGR	RAMA		

REVISIONS

PSRS* 28168

APPROVED BY
JN 30950574
SUPV
DSGN M. GOODWIN
DWN M. GOODWIN
CHKD R. MINGUS
OK
DATE 8/15/2013
SCALES AS SHOWN

STAMPS / CONSTRUCTION NOTES
LINE 57B MP 2.02 & 3.39
TILT METER REPLACEMENT
ON McDONALD AND BACON ISLAND

PACIFIC GAS AND ELECTRIC COMPANY
WALNUT CREEK , CALIFORNIA

MICROFILM
BILL OF MATL SHEET 6
DWG LIST SHEET
SUPSDS
SUPSD BY
SHEET NO. 2 OF 7 SHEETS
30950574 1

GENERAL REQUIREMENTS:

1. CALL 811 (1-800-227-2600) A MINIMUM OF 2 BUSINESS DAYS (NOT INCLUDING INITIAL DAY OF CONTACT) IN ADVANCE BEFORE YOU DIG, GRADE, OR EXCAVATE FOR THE MARKING OF UNDERGROUND UTILITIES.

2. UTILITY NOTES
   A. EXISTING UTILITIES AS SHOWN ON THESE DRAWINGS ARE FROM THE BEST AVAILABLE INFORMATION. THE CONTRACTOR IS RESPONSIBLE FOR VERIFYING THE LOCATION OF ALL UTILITIES THAT MAY BE IMPACTED BY THE PROJECT.
   B. THE INFORMATION SHOWN ON THIS DRAWING CONCERNING TYPE AND LOCATION OF UNDERGROUND AND OTHER UTILITIES IS NOT GUARANTEED TO BE ACCURATE OR ALL INCLUSIVE. THE CONTRACTOR IS RESPONSIBLE FOR MAKING ALL DETERMINATIONS AS TO THE TYPE AND LOCATION OF UNDERGROUND AND OTHER UTILITIES AS MAY BE NECESSARY TO AVOID DAMAGE.
   C. PROSPECTING IS REQUIRED AHEAD OF WORK. ALL OFFSETS OR ROPING WILL NEED TO BE APPROVED BY PG&E ENGINEER, AND ASBUILT DETAILS SHOWN ON PROFILE AND CONSTRUCTION DETAIL SHEETS.

3. ELBOWS AND FIELD BENDS
   A. ALL BENDS ARE SMOOTH FIELD BENDS, EXCEPT WHERE ELBOWS ARE SHOWN. FIELD BENDS SHALL BE MADE IN ACCORDANCE WITH GAS STANDARD A-36 SECTION 4-D.
   B. IN ORDER TO AVOID EXCESSIVE STRAIN ON THE PIPELINE, THERE SHALL BE A MINIMUM SEPARATION OF 5' BETWEEN A ROPED SECTION OF PIPELINE AND ANY ELBOWS OR FIELD BENDS
   C. ALL ANGLES SHOWN IN THE PLAN AND PROFILE ARE APPROXIMATE AND SHALL BE CUT TO SUIT FIELD CONDITION.

4. SEPARATION FROM OTHER STRUCTURES
   A. CROSSING UNDERGROUND FACILITIES: THIS PIPELINE MUST BE INSTALLED WITH AT LEAST 24 INCHES OF CLEARANCE FROM ANY OTHER UNDERGROUND STRUCTURE/UTILITY NOT ASSOCIATED WITH THE PIPELINE UNLESS NOTED ON THE DRAWINGS.
   B. PARALLELING UNDERGROUND FACILITIES: THIS PIPELINE MUST BE INSTALLED WITH AT LEAST 5 FEET OF CLEARANCE FROM ANY OTHER UNDERGROUND STRUCTURE/UTILITY NOT ASSOCIATED WITH THE PIPELINE UNLESS NOTED ON THE DRAWINGS.

5. RESTORATION AND CLEAN UP
   A. RESTORATION OF PUBLIC STREETS, SIDEWALKS, CURBS, ETC. ABOVE PIPE BEDDING SHALL BE IN ACCORDANCE WITH THE LATEST CITY STANDARDS.
   B. WHERE EVER THERE ARE ROW CROPS, THE TOPSOIL SHALL BE REMOVED TO A DEPTH OF 12" AND STORED ON SITE. UPON COMPLETION OF CONSTRUCTION, THE TOPSOIL SHALL BE RESTORED. TAKE CARE TO PREVENT MIXING OF TOPSOIL AND SUBSOIL.

6. EXISTING TIE-IN WELDS SHALL BE IDENTIFIED AND REMOVED IF PRACTICAL.

7. WELDING REQUIREMENTS
   A. ALL ARC WELDING IS TO BE PERFORMED IN ACCORDANCE WITH GAS STANDARD D-22. ALL CANS OR SPOOLS SHALL BE A MINIMUM LENGTH OF ONE PIPE DIAMETER, WHENEVER POSSIBLE.
   B. INSTALL TEST STATIONS WITH THERMITE WELD CONNECTION IN ACCORDANCE WITH GAS T & D MANUAL O-10, O-10.1 AND O-10.2.

8. WELDING VALVES AND FITTINGS
   WHEN 16" AND LARGER VALVES AND FITTINGS ARE WELDED TO EACH OTHER OR TO PIPE, THE JOINT SHALL HAVE A TWO PASS WELD ON THE INSIDE, AS WELL AS THE OUTSIDE WELD, IF THE INTERNAL MISALIGNMENT EXCEEDS 3/32". THIS REQUIREMENT ALSO APPLIES TO SMALLER DIAMETER VALVES AND FITTINGS WHEN IT IS PRACTICAL.

9. HYDROSTATIC TEST REQUIREMENTS
   A. HYDROSTATIC TESTING SHALL MEET PRESSURE AND DURATION REQUIREMENTS OF GAS STANDARD A-34 AND SHALL BE CONDUCTED IN ACCORDANCE WITH GAS STANDARD TD4137-04.
   B. ALL WELDS THAT HAVE NOT BEEN HYDRO TESTED AND ALL FITTINGS SHALL BE SOAP TESTED AT 100 PSIG AND AT OPERATING PRESSURE.

10. PAINTING AND COATING REQUIREMENTS
   A. ALL EXPOSED PIPE AND FITTINGS ARE TO BE PAINTED IN ACCORDANCE WITH GAS STANDARD E-30. ALL COATING ON BURIED PIPE AND FITTINGS ARE TO BE APPLIED IN ACCORDANCE WITH GAS STANDARD E-35.
   B. FOR COATING SELECTIONS ON BURIED PIPE SEE DIRECT BURIAL COATING SELECTIONS TABLE.

COATING REMOVAL:

BEFORE REMOVING THE PIPE COATING ON PRE-1972 PIPE (DOES NOT INCLUDE PLASTIC TAPE OR FUSION BONDED EPOXY COATINGS) THE FOLLOWING STEPS SHALL BE TAKEN:

-FOR ALL NON-EMERGENCY WORK, PRE-1972 PIPE WRAP MUST BE EVALUATED TO DETERMINE IF IT CONTAINS ASBESTOS PRIOR TO REMOVAL.

-FOR EMERGENCY WORK ON PRE-1972 PIPE, ASSUME THE WRAP CONTAINS > 1% ASBESTOS UNTIL THE WRAP CAN BE TESTED.

-OBTAIN SAMPLES OF THE WRAP, AND HAVE SAMPLES TESTED FOR ASBESTOS IN ACCORDANCE WITH RP 4711.

-TEST RESULTS ARE TO BE INCLUDED WITH AS-BUILTS.

-FOLLOW PROCEDURE IN WP 4711-01 FOR REMOVAL OF PIPE WRAP.

CATHODIC PROTECTION NOTES:

1. IN ORDER THAT THE CP DEPARTMENT CAN CONDUCT A REVIEW OF THE INTERNAL CONDITION OF THE PIPELINE, APPROXIMATELY TWO DAYS PRIOR TO THE TIE-IN, NOTIFY BRYON WINGET AT 925-324-3602 OR BILL GRAVES AT 805-423-7924 IN THE CP DEPARTMENT.

2. UPON COMPLETETION OF BORINGS, CONTACT BRYON WINGET AT 925-324-2602 OR BILL GRAVES AT 805-423-7924 IN THE CP DEPTARTMENT, TO PERFORM CURRENT DRAIN TESTS ON THE PIPELINE SEGMENT THAT WAS INSTALLED IN THE BORE, PRIOR TO WELDING PIPE ON EITHER SIDE OF THE BORE.

3. INSTALLATION OF THE OMNIMETRIX RECTIFIER REMOTE MONITOR, PRIOR TO ENERGIZING THE RECTIFIER CONTACT BRYON WINGET AT 925-324-2602 OR BILL GRAVES AT 805-423-7924 IN THE CP DEPARTMENT.

DEACTIVATION PROCEDURE FOR EXISTING PIPE

1. GT&D UTILITY WORK PROCEDURE TD 9500P-16 SHALL BE FOLLOWED.

2. THE EXISTING PIPELINE SHALL BE 100% PURGED WITH INERT GAS AS PER STANDARD A-38.

3. AT INTERVALS SPECIFIED IN TD 9500P-16 THE EXISITING MAIN WILL BE CUT AND PLATED SEE DEACTIVATION SHEET

4. AT EACH SUCH LOCATION , A PIECE OF PIPE AT LEAST 24" LONG SHALL BE REMOVED. THE OPEN ENDS OF DEACTIVATED MAIN SHALL BE SEALED BY THE MOST APPROPRIATE METHOD OUTLINED IN GT&D UTILITY WORK PROCEDURE TD 9500P-16. BACKFILL MUST BE THOROUGHLY COMPACTED IN PLACE OF THE REMOVED SECTION OF PIPE.

5. SERVICE CONNECTIONS TO BE DEACTIVATED AS INDICATED ON THE DRAWINGS SHALL BE CUT AND PLATED.

6. VALVES AND CURB COCKS MAY BE REMOVED AND SALVAGED IF THE COST OF REMOVAL IS JUSTIFIED. THE OPEN ENDS OF PIPE SHALL BE SEALED AS NOTED ABOVE.

GENERAL NOTES

NOTE
ALL FIELD CHANGES REQUIRE APPROVAL BY PROJECT ENGINEER, CONTACT NEIL FLEMMER 925-979-8575

TIE-IN AND CLEARANCE PROCEDURE
TIE-IN AND CLEARANCE PROCEDURE TO BE PREPARED AND PERFORMED IN ACCORDANCE WITH THE FOLLOWING WORK PROCEDURES:

1. WP4100-01, HOT AND COLD WORK METHODS FOR NATURAL GAS TRANSMISSION PIPELINE SHUTDOWN AND TIE-IN.
2. WP4100-10, GAS CLEARANCE PROCEDURES FOR FACILITIES OPERATING OVER 60 PSIG.

SAFETY

SAFETY PLEDGE

I ALWAYS PUT SAFETY FIRST.
I LOOK FOR AND ACT TO RESOLVE UNSAFE SITUATIONS.
I HELP AND ENCOURAGE OTHERS TO ACT SAFELY.

PRELIMINARY

REGISTERED PROFESSIONAL ENGINEER
WESLEY GROTHER CRAIL
M34879
EXP.
MECHANICAL
STATE OF CALIFORNIA

PSRS# 28168

CALL:1-811

NOTIFIED U.S.A.

DATE TICKET NO. BY

WELDING INSPECTED PER PG&E GAS STANDARD D-40
VISUAL ☐
MAGNETIC PARTICLE ☐
INSPECTOR
DATE

NOTE:
WARNING: CONFIDENTIAL, PROPRIETARY INFORMATION THIS DOCUMENT CONTAINS CONFIDENTIAL, PROPRIETARY INFORMATION THAT IS THE SOLE PROPERTY OF PACIFIC GAS AND ELECTRIC COMPANY AND IS INTENDED FOR USE ONLY BY AUTHORIZED PACIFIC GAS AND ELECTRIC COMPANY EMPLOYEES & AGENTS. COPYRIGHT PACIFIC GAS AND ELECTRIC COMPANY.

NO.	DATE	DESCRIPTION	GM/SPEC	DWN	CHKD	SUPV	APVD BY
1	- -	ISSUED FOR CONSTRUCTION	30950574	MDGR	RAMA		

REVISIONS

APPROVED BY
JN 30950574
SUPV
DSGN M. GOODWIN
DWN M. GOODWIN
CHKD R. MINGUS
OK
DATE 8/15/2013
SCALES AS SHOWN

STAMPS / CONSTRUCTION NOTES
LINE 57B MP 2.02 & 3.39
TILT METER REPLACEMENT
ON McDONALD AND BACON ISLAND

PACIFIC GAS AND ELECTRIC COMPANY
WALNUT CREEK , CALIFORNIA

MICROFILM
BILL OF MATL SHEET 6
DWG LIST SHEET
SUPSDS
SUPSD BY
SHEET NO. 3 OF 7 SHEETS
30950574 1

EASEMENT/ WORK SPACE
- PULL BACK TEMPORARY WORKSPACE
- DRILL RIG FOOTPRINT WORKSPACE
- TEMPORARY WORKSPACE
- PERMANENT EASEMENT

ENVIRONMENTAL: GENERAL | CLASS LOC | CULTURAL | BIOLOGICAL | WATERBODIES | EXCLUSIONS

RIGHT OF WAY
TRACT NUMBER
OWNERSHIP/AGENCY
PROPERTY SKETCH NO.
PERMIT DWG. NO

RECLAMATION DISTRICT • 2028

LEGEND:

- CABLE TV RISER
- MANHOLE DRAIN
- MANHOLE SEWER
- TELEPHONE BOX
- BLOW OFF VALVE
- SEWER CLEANOUT
- WATER METER
- UTILITY RISER
- AIR RELEASE VALVE
- UNDERGROUND TELE. SIGN
- TELEPHONE PAINT MARK
- MANHOLE TELEPHONE
- SIGN
- GUY
- PANEL BOX
- POWER POLE
- SMUD BOX
- TRAF LIGHT
- PANEL BOX
- UNDERGROUND GAS SIGN
- GAS PAINT MARK
- SPOT ELEVATION
- PROPOSED GAS LINE
- EXISTING GAS LINE
- GAS MAIN TO RETIRE
- CTS COUPON TEST STATION
- ETS ELECTROLYSIS TEST STATION
- R POLE-MOUNTED RECTIFIER
- A DEEPWELL ANODE
- PIPELINE MARKER
- "H" PIPELINE HORIZONTAL STA
- "P" PIPELINE FOOTAGE
- # B/M ITEM NO.

(NOTE: B/M ITEM NO. FOR FITTINGS SHOWN ON SURVEY PLAN.

B/M ITEM NO. FOR PIPING SHOWN ON PIPELINE STATIONING.)

SURVEY PLAN
SCALE: 1"=10'

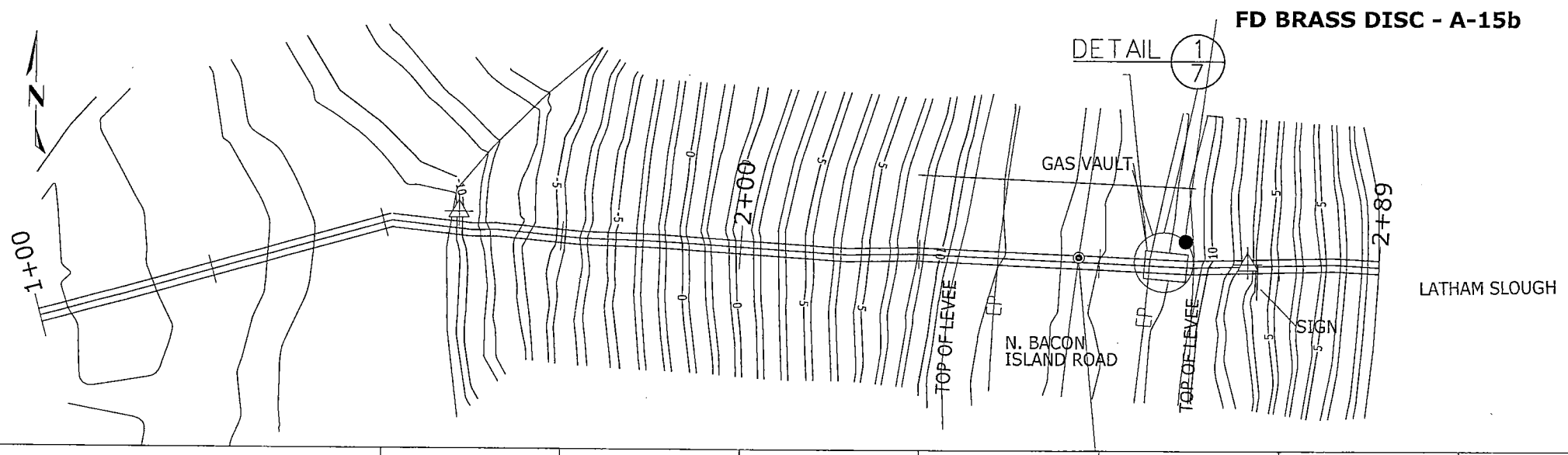

SURVEY PROFILE
ELEVATION DATUM:
LOCATION OF BENCH MARK:
VERTICAL SCALE: 1"=5' HORIZONTAL SCALE: 1"=10'

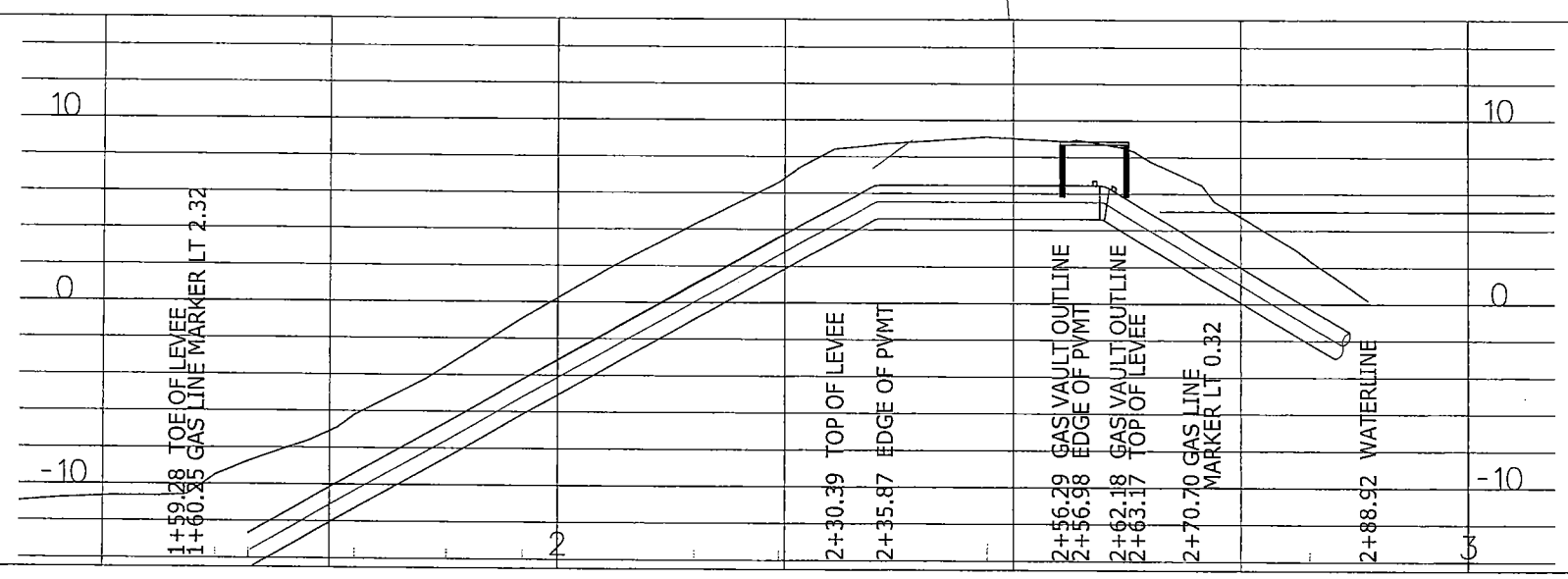

DATUM:
HORIZONTAL:NAD83
VERTICAL: NGVD29

PIPELINE DETAILS
STATIONING

PRELIMINARY

SAFETY

SAFETY PLEDGE

I ALWAYS PUT SAFETY FIRST.
I LOOK FOR AND ACT TO RESOLVE UNSAFE SITUATIONS.
I HELP AND ENCOURAGE OTHERS TO ACT SAFELY.

REGISTERED PROFESSIONAL ENGINEER
WINSLEY GROTHER GRAY
M34879
MECHANICAL
STATE OF CALIFORNIA

PSRS# 28168

UNDERGROUND SERVICE ALERT
CALL BEFORE YOU DIG
CALL:811

NOTIFIED
U.S.A.
DATE TICKET NO. BY

WELDING INSPECTED PER PG&E GAS STANDARD D-40
VISUAL ☐
MAGNETIC PARTICLE ☐
INSPECTOR
DATE

NOTE:
WARNING: CONFIDENTIAL, PROPRIETARY INFORMATION
THIS DOCUMENT CONTAINS CONFIDENTIAL, PROPRIETARY INFORMATION THAT IS THE SOLE PROPERTY OF PACIFIC GAS AND ELECTRIC COMPANY AND IS INTENDED FOR USE ONLY BY AUTHORIZED PACIFIC GAS AND ELECTRIC COMPANY EMPLOYEES & AGENTS. COPYRIGHT PACIFIC GAS AND ELECTRIC COMPANY.

NO.	DATE	DESCRIPTION	GM/SPEC	DWN	CHKD	SUPV	APVD BY
1	- - -	ISSUED FOR CONSTRUCTION	30950574	MDGR	RAMA		

REVISIONS

APPROVED BY	
JN	30950574
SUPV	
DSGN	M. GOODWIN
DWN	M. GOODWIN
CHKD	R. MINGUS
OK	
DATE	8/15/2013
SCALES	AS SHOWN

- PLAN & PROFILE-
LINE 57B MP 2.02 & 3.39
TILT METER REPLACEMENT
ON McDONALD AND BACON ISLAND

PACIFIC GAS AND ELECTRIC COMPANY
WALNUT CREEK , CALIFORNIA

MICROFILM
BILL OF MATL SHEET 6
DWG LIST SHEET
SUPSDS
SUPSD BY
SHEET NO. 4 OF 7 SHEETS
30950574 1

30850574--28168 Tilt Meter and Vault Replacement.dgn 8/23/2013 9:53:35 AM
30850574--28168 Tilt Meter and Vault Replacement 8/23/2013 9:53:33 AM

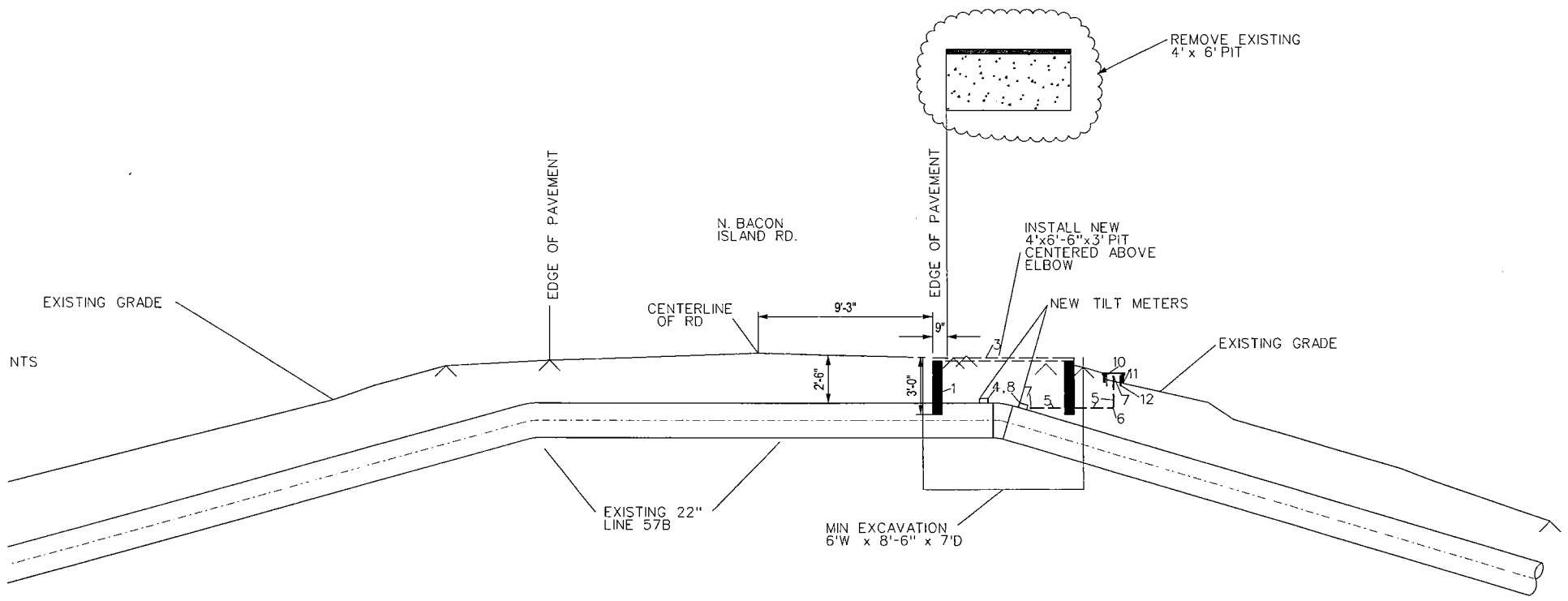

DETAIL 1/4 BACON ISLAND LEVEE

1/4" = 1'

PRELIMINARY

SKETCHES FOR PERMIT REQUEST

SAFETY

SAFETY PLEDGE

I ALWAYS PUT SAFETY FIRST.

I LOOK FOR AND ACT TO

RESOLVE UNSAFE SITUATIONS.

I HELP AND ENCOURAGE

OTHERS TO ACT SAFELY.

NOTE:

WARNING: CONFIDENTIAL, PROPRIETARY INFORMATION THIS DOCUMENT CONTAINS CONFIDENTIAL, PROPRIETARY INFORMATION THAT IS THE SOLE PROPERTY OF PACIFIC GAS AND ELECTRIC COMPANY AND IS INTENDED FOR USE ONLY BY AUTHORIZED PACIFIC GAS AND ELECTRIC COMPANY EMPLOYEES & AGENTS. COPYRIGHT PACIFIC GAS AND ELECTRIC COMPANY.

NO.	DATE	DESCRIPTION	GM/SPEC	DWN	CHKD	SUPV	APVD BY
1	- -	ISSUED FOR PERMITTING ONLY	30950574	MDGR	RAMA		
	- -						

REVISIONS

PSRS* 28168

APPROVED BY	
JN	30950574
SUPV	
DSGN	M. GOODWIN
DWN	M. GOODWIN
CHKD	R. MINGES
OK	
DATE	9/13/2013
SCALES	AS SHOWN

BACON ISLAND CONSTRUCTION DETAILS
LINE 57B MP 2.02 & 3.39
TILT METER REPLACEMENT
ON McDONALD AND BACON ISLAND

PACIFIC GAS AND ELECTRIC COMPANY
SAN RAMON , CALIFORNIA

REGISTERED PROFESSIONAL ENGINEER
WESLEY GROTHER CRAIG
M34879
EXP.
MECHANICAL
STATE OF CALIFORNIA

MICROFILM	
BILL OF MATL	SHEET 8
DWG LIST	SHEET
SUPSDS	
SUPSD BY	
SHEET NO.	3 OF 4 SHEETS

30950574 1

N1508

950574--permit sketch.dgn 9/21/2013 10:27:33 AM

30950574--permit sketch.dgn 9/21/2013 10:27:33 AM

Date-Name_Stamp.tbl

mdgr

EASEMENT/ WORK SPACE

- PULL BACK TEMPORARY WORKSPACE
- DRILL RIG FOOTPRINT WORKSPACE
- TEMPORARY WORKSPACE
- PERMANENT EASEMENT

ENVIRONMENTAL: GENERAL | CLASS LOC | CULTURAL | BIOLOGICAL | WATERBODIES | EXCLUSIONS

RIGHT OF WAY

TRACT NUMBER
OWNERSHIP/AGENCY
PROPERTY SKETCH NO.
PERMIT DWG. NO

RECLAMATION DISTRICT • 2028

SURVEY PLAN — SCALE: 1"=10'

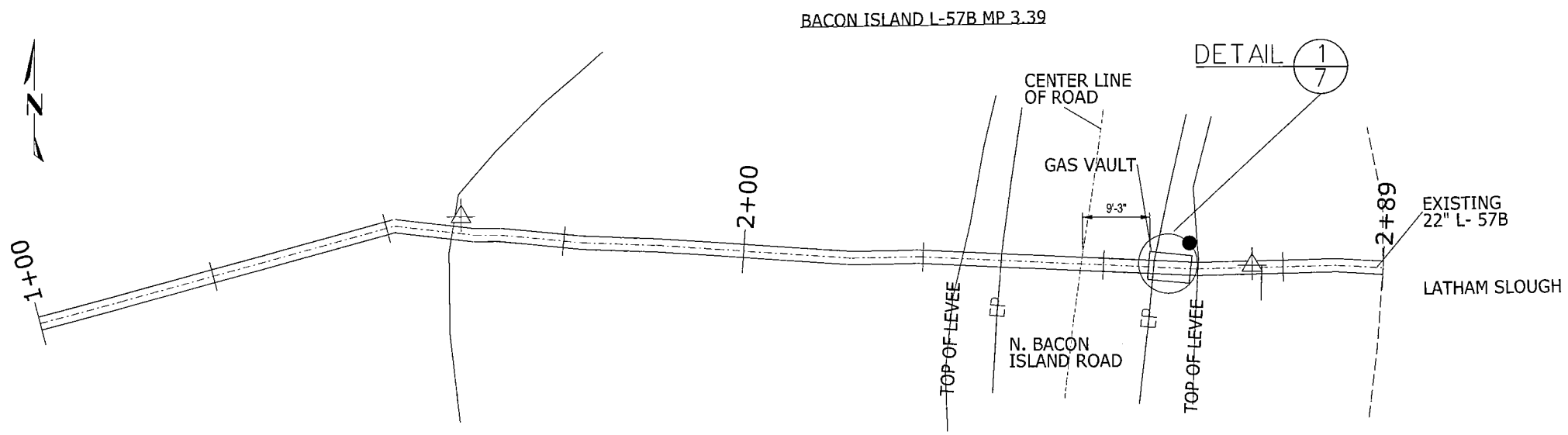

SURVEY PROFILE — HORIZONTAL SCALE: 1"=10'

ELEVATION DATUM:
LOCATION OF BENCH MARK:
VERTICAL SCALE: 1"=5'

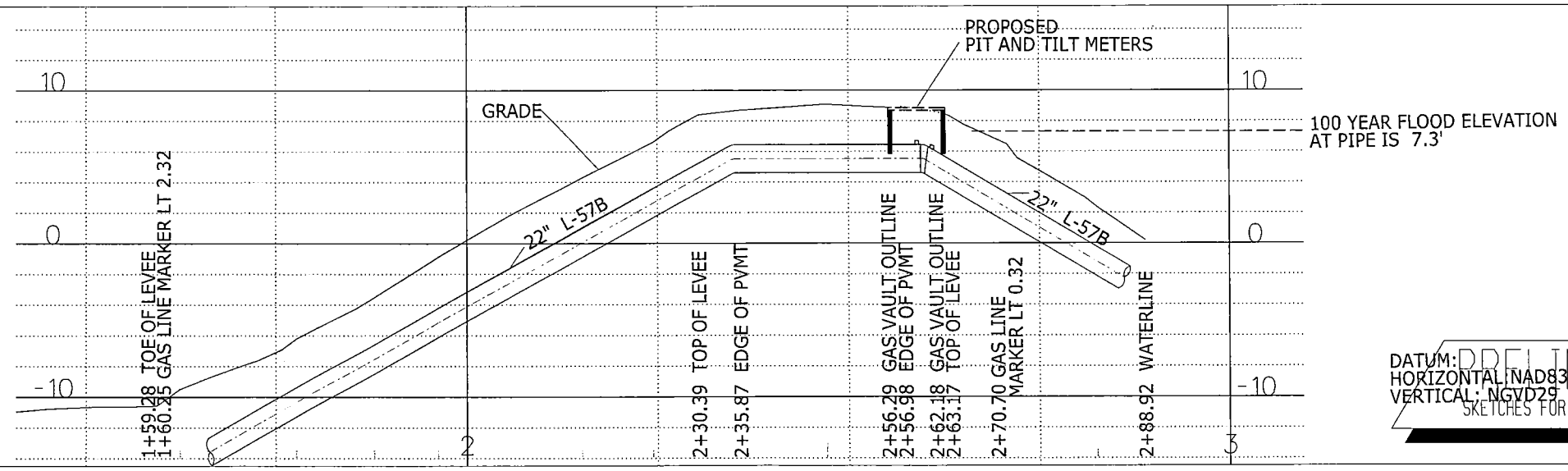

DATUM:
HORIZONTAL: NAD83
VERTICAL: NGVD29

PRELIMINARY
SKETCHES FOR PERMIT REQUEST

SAFETY

SAFETY PLEDGE

I ALWAYS PUT SAFETY FIRST.
I LOOK FOR AND ACT TO RESOLVE UNSAFE SITUATIONS.
I HELP AND ENCOURAGE OTHERS TO ACT SAFELY.

PG&E

PIPELINE DETAILS
STATIONING

REGISTERED PROFESSIONAL ENGINEER — WESLEY GROTHER CRAIG — M34879 — EXP. — MECHANICAL — STATE OF CALIFORNIA

PSRS# 28168

UNDERGROUND SERVICE ALERT — USA — CALL BEFORE YOU DIG — CALL:811

NOTIFIED U.S.A.

DATE TICKET NO. BY

WELDING INSPECTED PER PG&E GAS STANDARD D-40
VISUAL ☐
MAGNETIC PARTICLE ☐
INSPECTOR
DATE

NOTE:
WARNING: CONFIDENTIAL, PROPRIETARY INFORMATION THIS DOCUMENT CONTAINS CONFIDENTIAL, PROPRIETARY INFORMATION THAT IS THE SOLE PROPERTY OF PACIFIC GAS AND ELECTRIC COMPANY AND IS INTENDED FOR USE ONLY BY AUTHORIZED PACIFIC GAS AND ELECTRIC COMPANY EMPLOYEES & AGENTS. COPYRIGHT PACIFIC GAS AND ELECTRIC COMPANY.

NO.	DATE	DESCRIPTION	GM/SPEC	DWN	CHKD	SUPV	APVD BY
1	- -	ISSUED FOR PERMITTING ONLY	30950574	MDGR	RAMA		

REVISIONS

APPROVED BY	
JN	30950574
SUPV	
DSGN	M. GOODWIN
DWN	M. GOODWIN
CHKD	R. MINGES
OK	
DATE	9/13/2013
SCALES	AS SHOWN

- PLAN & PROFILE-
LINE 57B MP 2.02 & 3.39
TILT METER REPLACEMENT
ON McDONALD AND BACON ISLAND

PACIFIC GAS AND ELECTRIC COMPANY
SAN RAMON , CALIFORNIA

MICROFILM	
BILL OF MATL	SHEET 8
DWG LIST	SHEET
SUPSDS	
SUPSD BY	
SHEET NO. 2	OF 4 SHEETS
30950574	1

N1808

30950574--permit sketch.dgn 9/21/2013 10:27:05 AM

30950574--permit sketch.dgn 9/21/2013 10:27:04 AM

mdgr

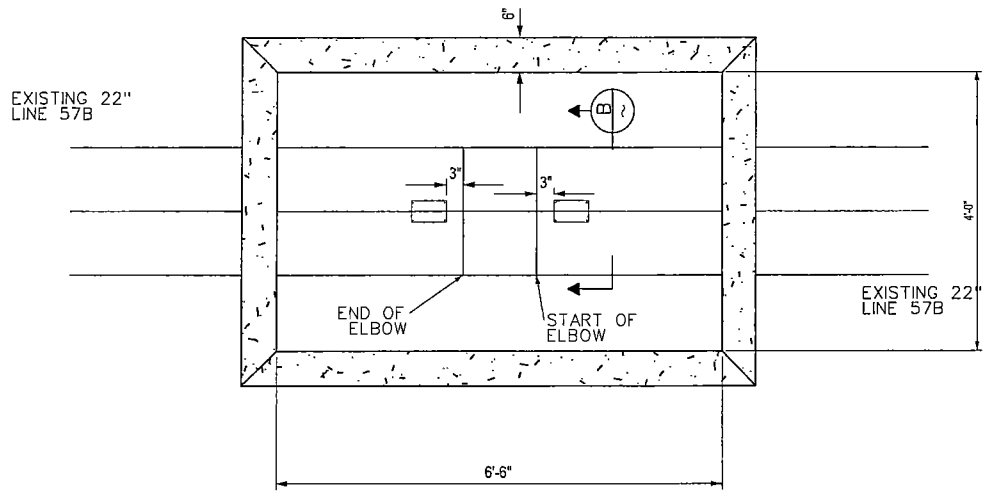

SECTION A
NTS

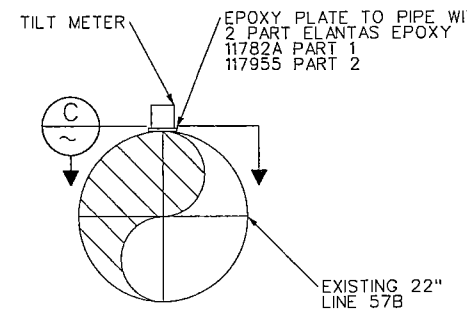

SECTION B
NTS

PG&E CODE	ITEM NO.	QNTY.	ORDER NO. 30950574 DESCRIPTION	CATALOG OR DWG REF.	OTHER DATA
M043269	1	3	BODY CONCRETE BOX, 4' x 6'-6" x 3' DEEP, PRECAST PIT (1 WITH MOUSE HOLE ON 1 SIDE)	GS&S K-10	OLD CASTLE PRECAST QUOTE # S166990-1
M043632	2	2	VAULT COVER, FOR 4'x6'-6" PIT, RATED FOR INCIDENTAL TRAFFIC WITH CHK. PLAVE COVER (FOR McDONALD ISLAND)	----------	OLD CASTLE PRECAST QUOTE # S166990-1
----------	3	1	VAULT COVER, FOR 4'x6'-6" PIT, RATED FOR TRAFFIC (FOR BACON ISLAND)	----------	OLD CASTLE PRECAST QUOTE # S166990-1
----------	4	6	TILT METERS	----------	
----------	5	30'	CONDUIT, 2" SCHEDULE 40 PVC	----------	
----------	6	3	CONDUIT, 2" SCHEDULE 40 PVC, 90° BEND	----------	
----------	7	6	CONDUIT, 2" SCHEDULE 80 PVC, CAP	----------	
----------	8	6	PLATE, 3/8" 316 STAINLESS STEEL PLATE, 3-3/4" WIDE x 6" LONG	----------	
----------	9	24	316 STAINLESS STEEL SCREWS, #10-24 x 3/4"	----------	
M043225	10	3	CAST IRON VALLE LID WITH LABEL PG&E GAS	GS&S K-41	
M043271	11	3	VALVE BOX BODY	GS&S K-41	
M016063	12	1	VALVE BOX EXTENSION, 8" CORRUGATED PLASTIC DRAINAGE TUBING 10' LENGTH	GS&S K-41	

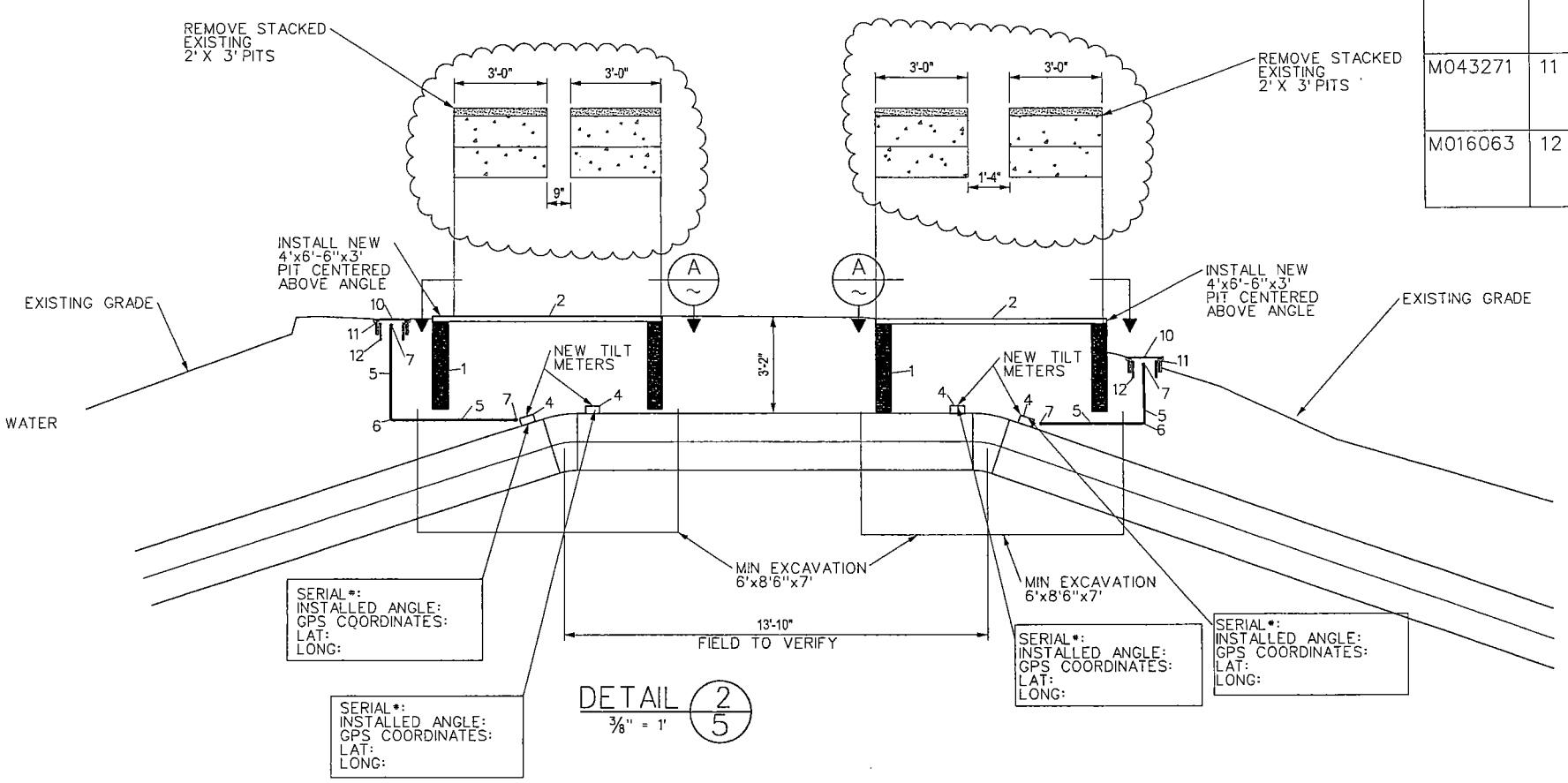

DETAIL 2/5
3/8" = 1'

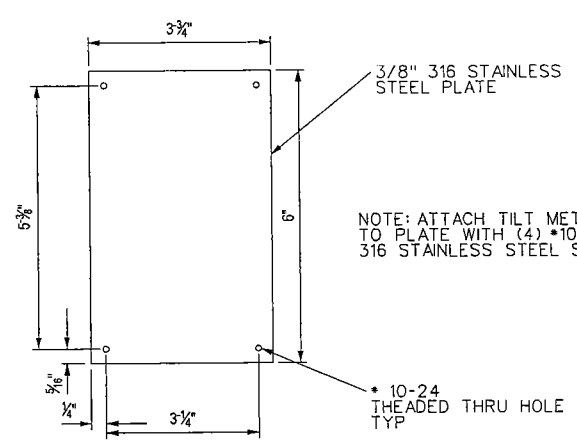

NOTE: ATTACH TILT METER TO PLATE WITH (4) #10-24 X 3/4" 316 STAINLESS STEEL SCREWS.

SECTION C
NTS

PRELIMINARY

CIRCLE OF SAFETY

SAFETY PLEDGE

I ALWAYS PUT SAFETY FIRST.
I LOOK FOR AND ACT TO RESOLVE UNSAFE SITUATIONS.
I HELP AND ENCOURAGE OTHERS TO ACT SAFELY.

REGISTERED PROFESSIONAL ENGINEER — WESLEY GROTHER CRAIG — M34879 — EXP. — MECHANICAL — STATE OF CALIFORNIA

NOTE:

WARNING: CONFIDENTIAL, PROPRIETARY INFORMATION
THIS DOCUMENT CONTAINS CONFIDENTIAL, PROPRIETARY INFORMATION THAT IS THE SOLE PROPERTY OF PACIFIC GAS AND ELECTRIC COMPANY AND IS INTENDED FOR USE ONLY BY AUTHORIZED PACIFIC GAS AND ELECTRIC COMPANY EMPLOYEES & AGENTS. COPYRIGHT PACIFIC GAS AND ELECTRIC COMPANY.

NO.	DATE	DESCRIPTION	GM/SPEC	DWN	CHKD	SUPV	APVD BY
1	- - -	ISSUED FOR CONSTRUCTION	30950574	MDGR	RAMA		

REVISIONS

PSRS* 28168

APPROVED BY	
JN	30950574
SUPV	
DSGN	M. GOODWIN
DWN	M. GOODWIN
CHKD	R. MINGUS
OK	
DATE	8/15/2013
SCALES	AS SHOWN

CONSTRUCTION DETAILS / BOM
LINE 57B MP 2.02 & 3.39
TILT METER REPLACEMENT
ON McDONALD AND BACON ISLAND

PACIFIC GAS AND ELECTRIC COMPANY
WALNUT CREEK , CALIFORNIA

MICROFILM	
BILL OF MATL	SHEET 6
DWG LIST	SHEET
SUPSDS	
SUPSD BY	
SHEET NO. 6	OF 7 SHEETS

30950574 1

30850574--28168 Tilt Meter and Vault Replacement.dgn 8/23/2013 9:54:27 AM

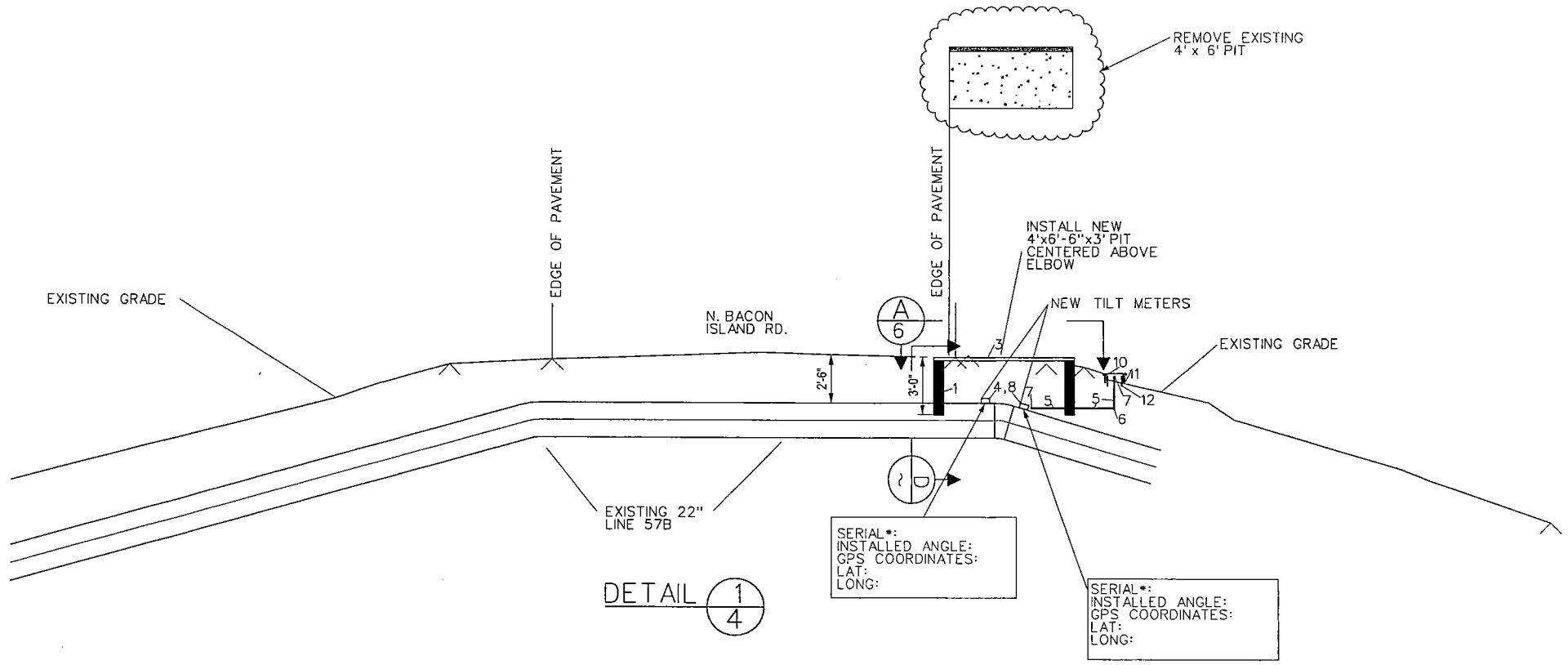

DETAIL 1/4

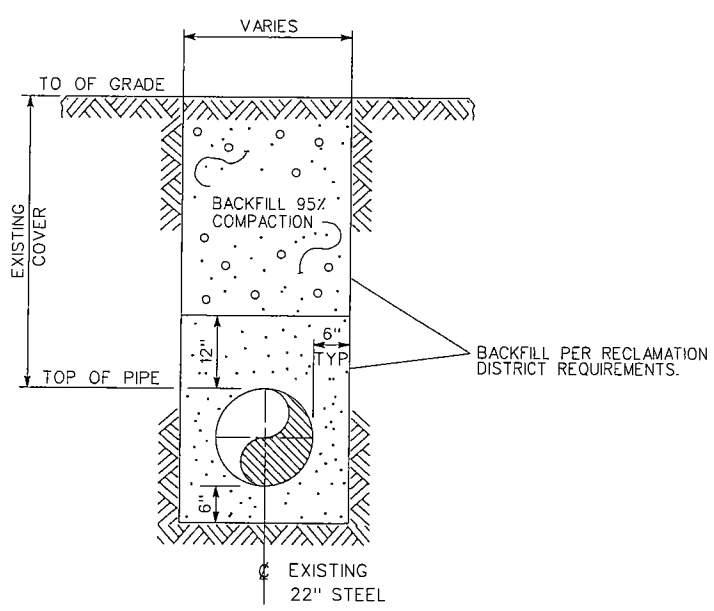

DETAIL 3 TYP
NOT TO SCALE
TYP TRENCH
NON PAVED AREA

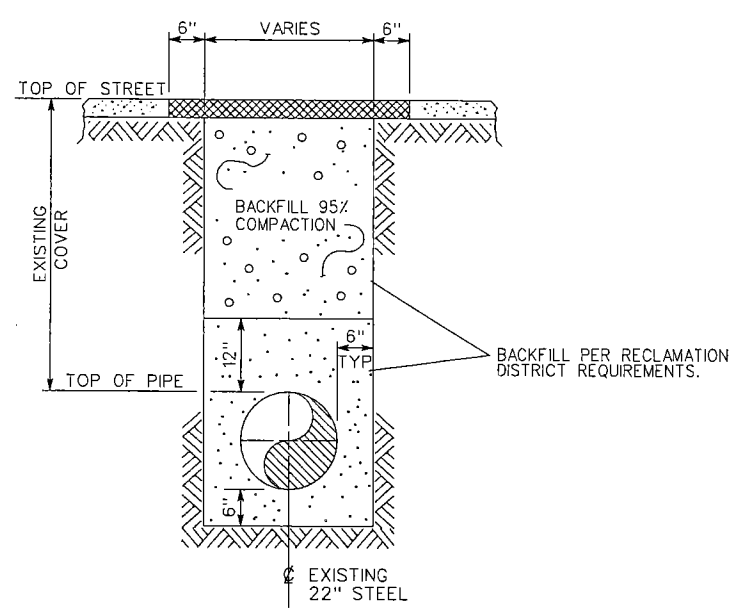

DETAIL 4 TYP
NOT TO SCALE
TYP "T" TRENCH
FOR PAVED AREA

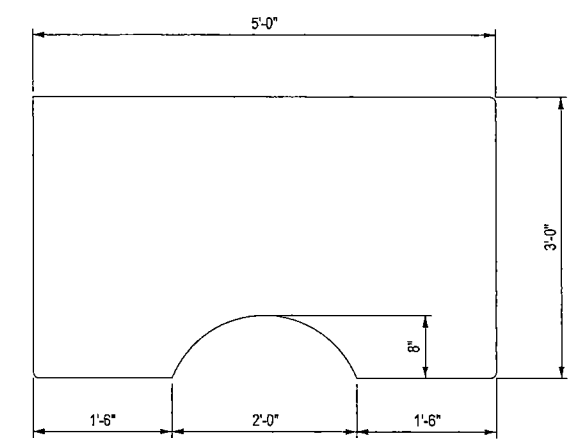

PRELIMINARY

SECTION D MOUSE HOLE IN EDGE OF PIT

SAFETY

SAFETY PLEDGE

I ALWAYS PUT SAFETY FIRST.
I LOOK FOR AND ACT TO
RESOLVE UNSAFE SITUATIONS.
I HELP AND ENCOURAGE
OTHERS TO ACT SAFELY.

REGISTERED PROFESSIONAL ENGINEER
WESLEY GROTHER CRAIG
M34879
EXP.
MECHANICAL
STATE OF CALIFORNIA

NOTE:

WARNING: CONFIDENTIAL, PROPRIETARY INFORMATION THIS DOCUMENT CONTAINS CONFIDENTIAL, PROPRIETARY INFORMATION THAT IS THE SOLE PROPERTY OF PACIFIC GAS AND ELECTRIC COMPANY AND IS INTENDED FOR USE ONLY BY AUTHORIZED PACIFIC GAS AND ELECTRIC COMPANY EMPLOYEES & AGENTS. COPYRIGHT PACIFIC GAS AND ELECTRIC COMPANY.

PSRS# 28168

NO.	DATE	DESCRIPTION	GM/SPEC	DWN	CHKD	SUPV	APVD BY
1	- -	ISSUED FOR CONSTRUCTION	30950574	MDGR	RAMA		

REVISIONS

APPROVED BY	
JN	30950574
SUPV	
DSGN	M. GOODWIN
DWN	M. GOODWIN
CHKD	R. MINGUS
OK	
DATE	8/15/2013
SCALES	AS SHOWN

CONSTRUCTION DETAILS
LINE 57B MP 2.02 & 3.39
TILT METER REPLACEMENT
ON McDONALD AND BACON ISLAND

PACIFIC GAS AND ELECTRIC COMPANY
WALNUT CREEK , CALIFORNIA

MICROFILM	
BILL OF MATL	SHEET 6
DWG LIST	SHEET
SUPSDS	
SUPSD BY	
SHEET NO. 7 OF 7	SHEETS

30950574 1

PG&E CODE	ITEM NO.	QNTY.	ORDER NO. 30950574 DESCRIPTION	CATALOG OR DWG REF.	OTHER DATA
M043269	1	3	BODY CONCRETE BOX, 4' x 6'-6" x 3' DEEP, PRECAST PIT WITH 1 WITH MOUSE HOLE ON 1 SIDE SEE DETAILS	GS&S K-10	OLD CASTLE PRECAST QUOTE # S166990-1
	2			----------	
------	3	3	VAULT COVER, FOR 4'x6'-6" PIT, RATED FOR TRAFFIC (FOR BACON ISLAND)	----------	OLD CASTLE PRECAST QUOTE # S166990-1
------	4	6	TILT METERS	----------	PO # 2500811897
------	5	30'	CONDUIT, 2" SCHEDULE 40 PVC	----------	
------	6	3	CONDUIT, 2" SCHEDULE 40 PVC, 90° BEND	----------	
------	7	6	CONDUIT, 2" SCHEDULE 80 PVC, CAP	----------	
------	8	6	PLATE, 3/8" 316 STAINLESS STEEL PLATE, 3-3/4" WIDE x 6" LONG	----------	
------	9	24	316 STAINLESS STEEL SCREWS, #10-24 x 3/4"	----------	
M043225	10	3	CAST IRON VALVE LID WITH LABEL PG&E GAS	GS&S K-41	
M043271	11	3	VALVE BOX BODY	GS&S K-41	
M016063	12	1	VALVE BOX EXTENSION, 8" CORRUGATED PLASTIC DRAINAGE TUBING 10' LENGTH	GS&S K-41	
M029986	13	6	LINK SEALS, 400-C, MODEL 40, FOR 22" PIPE, 21 LINKS PER SEAL	GS&S A-74	

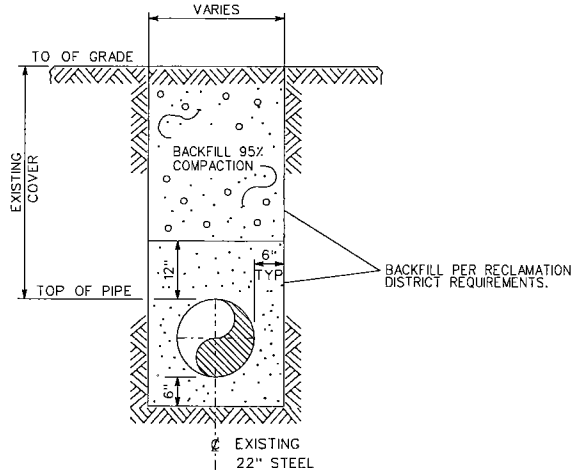

DETAIL 3 TYP — NOT TO SCALE — TYP TRENCH NON PAVED AREA

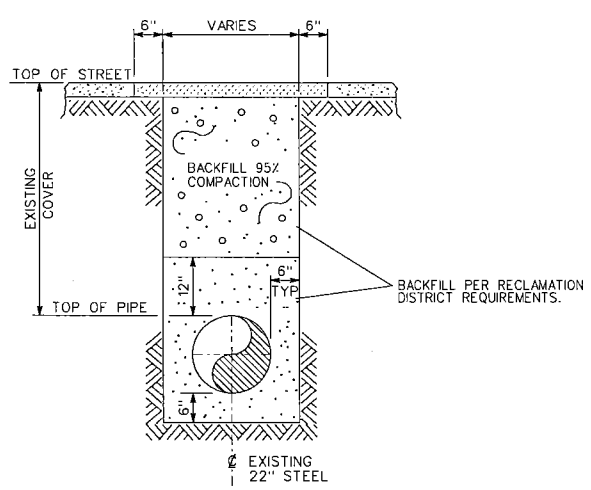

DETAIL 4 TYP — NOT TO SCALE — TYP "T" TRENCH FOR PAVED AREA

SAFETY

SAFETY PLEDGE

I ALWAYS PUT SAFETY FIRST.
I LOOK FOR AND ACT TO
RESOLVE UNSAFE SITUATIONS.
I HELP AND ENCOURAGE
OTHERS TO ACT SAFELY.

PRELIMINARY
SKETCHES FOR PERMIT REQUEST

REGISTERED PROFESSIONAL ENGINEER
WESLEY GROTHER CRAIG
M34879
MECHANICAL
STATE OF CALIFORNIA

NOTE:

WARNING: CONFIDENTIAL, PROPRIETARY INFORMATION
THIS DOCUMENT CONTAINS CONFIDENTIAL, PROPRIETARY INFORMATION THAT IS THE SOLE PROPERTY OF PACIFIC GAS AND ELECTRIC COMPANY AND IS INTENDED FOR USE ONLY BY AUTHORIZED PACIFIC GAS AND ELECTRIC COMPANY EMPLOYEES & AGENTS. COPYRIGHT PACIFIC GAS AND ELECTRIC COMPANY.

NO	DATE	DESCRIPTION	GM/SPEC	DWN	CHKD	SUPV	APVD BY
1	- -	ISSUED FOR PERMITTING ONLY	30950574	MDGR	RAMA		

REVISIONS

PSRS* 28168

APPROVED BY	
JN	30950574
SUPV	
DSGN	M. GOODWIN
DWN	M. GOODWIN
CHKD	R. MINGES
OK	
DATE	9/13/2013
SCALES	AS SHOWN

TYP DETAILS AND BILL OF MATERIALS
LINE 57B MP 2.02 & 3.39
TILT METER REPLACEMENT
ON McDONALD AND BACON ISLAND

PACIFIC GAS AND ELECTRIC COMPANY
SAN RAMON , CALIFORNIA

MICROFILM	
BILL OF MATL	SHEET 8
DWG LIST	SHEET
SUPSDS	
SUPSD BY	
SHEET NO. 4	OF 4 SHEETS

30950574 1

TRAFFIC CONTROL PLANS

750 S BACON ISLAND RD

STOCKTON, CALIFORNIA

PM30950574

LOCATION MAP

CONTRACTOR

Pacific Gas and Electric Company

CONTACT MATT GOODWIN

PHONE# (925) 244-3239

CONSULTANT

ALMENDARIZ CONSULTING INC

ALMENDARIZ CONSULTING, INC.
1136 SUNCAST LN STE 9
EL DORADO HILLS, CA 95762
(888) 306-1211 OFFICE
(888) 768-7022 FAX
CA C31 LIC #979806

REVISIONS			
REV.	DESCRIPTION	BY	DATE

PROJECT NO. 13653
DRAWN CAA
DESIGNED BME
CHECKED MAA

DATE
AUGUST 12, 2013

SHEET NO. 1 OF 3

GENERAL NOTES

1. NOTHING ALLOWED IN THE BUFFER AND TRANSITION AREAS AT ALL TIMES.
2. SIGNS ARE ONLY SHOWING TO THE PUBLIC WHEN IN USE.
3. SIGNS AND CHANNELIZING DEVICES MUST BE RETROREFLECTIVE OR ILLUMINATED DURING NIGHT OPERATIONS.
4. SIGN PANEL SIZES: 36"X36" MIN. ON ROADS <50mph, 48"x48" ON ROADS ≥ 50mph.
5. SIGNS ARE SPACED PER THE CA 2012 MUTCD.
6. CHANNELIZING DEVICES SPACING AND TAPER LENGTHS ARE BASED ON THEIR RESPECTIVE CHARTS. (SEE CHARTS THIS PAGE)
7. NOTIFY THE LOCAL LAW ENFORCEMENT, FIRE, AND AMBULANCE COMPANIES WITHIN 72 HOURS BEFORE CONSTRUCTION BEGINS.
8. CONTRACTOR TO MAKE SURE ALL TRAFFIC CONTROL EQUIPMENT MEETS ALL AGENCY REQUIREMENTS.
9. REMOVE ALL CONFLICTING MARKINGS FOR LONG TERM OPERATIONS (3 DAYS OR LONGER).
10. THE LOCATION OF THE SIGNS AS SHOWN ON THE ILLUSTRATIONS ARE GUIDELINES AND ACTUAL LOCATIONS WILL DEPEND UPON ALIGNMENT, GRADE, LOCATION OF STREET INTERSECTIONS AND 85% TILE/POSTED SPEED LIMITS/OR PRIMA FACIE.
11. WHILE CROSSING INTERSECTIONS DURING MOBILE WORK, WORK MUST FOLLOW THE FLOW OF TRAFFIC AND PROCEED ON A GREEN LIGHT.
12. FULL COMPLIANCE IS REQUIRED WITH THE COUNTY AGENCY.(AFFECTS NOTES #20 THRU 22, BELOW)
13. PEDESTRIAN ACCESS BE MAINTAINED AS PER THE CA 2012 MUTCD STANDARDS AND ADA REQUIREMENTS.
14. C30 SIGNS ARE PERMITTED IN BUFFER AREAS.
15. SIGN SPACING IS PROVIDED IN THE CA 2012 MUTCD EDITION, PART 6. TRAFFIC SPEEDS ARE BASED UPON RADAR MEASUREMENTS OF MOTORISTS. THE MUTCD ALLOWS FOR A "RANGE" IN SIGN PLACEMENT AND WILL BE PROVIDED BY DOT. THE 85% TILE IS USED WHEN AVAILABLE TO PROVIDE A MORE ACCURATE REPRESENTATION OF MOTORISTS SPEEDS.
16. ANY WORK WITHIN 200 FT OF A SIGNALIZED INTERSECTION WILL REQUIRE CONTACT AND COORDINATION WITH COUNTY AGENCY PRIOR TO ANY WORK.
17. QUALITY STANDARD TO MEET REQUIREMENTS OF SECTION 1A-2 OF THE CALIFORNIA MANUAL ON UNIFORM TRAFFIC CONTROL DEVICES.
18. ALL TRAFFIC CONTROL DEVICES INCLUDING: SIGNS, BARRICADES, VERTICAL PANELS, DRUMS, WARNING LIGHTS, ARROWBOARDS, CHANGEABLE MESSAGE SIGNS, CONES AND TUBULAR MARKERS THAT MEET THE REQUIREMENTS OF AMERICAN TRAFFIC SAFETY SERVICES ASSOCIATION (ATSSA). "CA MUTCD 2012" SHALL BE USED ON THIS PROJECT/THIS WORK.
19. THE NCHRP REPORT 476 PROVIDES GUIDELINES FOR DESIGN AND OPERATION OF NIGHTTIME TRAFFIC CONTROL FOR HIGHWAY MAINTENANCE AND CONSTRUCTION. SEE TYPICAL APPLICATIONS NWTA-1 THROUGH NWTA-7. COMPLY WITH ANSI 107-2004 FOR APPAREL. HIGHWAY CONSTRUCTION WORK LIGHTING SHALL BE PER CONSTRUCTION SAFETY ORDER 1523 (CALIFORNIA CODE OF REGULATIONS TITLE 8, DIVISION1, CHAPTER 4, SUBCHAPTER 4, ARTICLE 3, SECTION 1523 - ILLUMINATIONS).
20. SIDEWALKS AT THE CONSTRUCTION LOCATION MAY BE CLOSED WITH ADEQUATE DETOURS. SIDEWALKS MAY ONLY BE CLOSED TO THROUGH TRAFFIC AND SHALL NOT PREVENT LOCAL PEDESTRIANS ACCESS. DETOURS SHALL NOT INCREASE THE PATH OF TRAVEL BY MORE THAN 500 FT. DETOUR ROUTES SHALL BE LIMITED TO EXISTING SIDEWALKS, PRIVATE PROPERTIES (SEE BELOW REQUIREMENTS) AND CROSSINGS AT ROADWAY INTERSECTIONS. TO THE MAXIMUM EXTENT FEASIBLE, THE ALTERNATE CIRCULATION PATH SHALL BE PROVIDED ON THE SAME SIDE OF THE STREET AS THE DISRUPTED ROUTE. WHERE IT IS FEASIBLE TO PROVIDE A SAME-SIDE ALTERNATE CIRCULATION PATH AND PEDESTRIANS WILL BE DETOURED. SECTION 6D.02 OF THE CALIFORNIA MANUAL ON UNIFORM TRAFFIC CONTROL DEVICES FOR STREETS AND HIGHWAYS CA 2012 MUTCD EDITION, SPECIFIES THAT THE ALTERNATE PATH PROVIDE A SIMILAR LEVEL OF ACCESSIBILITY TO THAT OF THE EXISTING DISRUPTED ROUTE . THIS MAY INCLUDE THE INCORPORATION OF ACCESSIBLE PEDESTRIAN SIGNALS (APS), CURB RAMPS, OR OTHER ACCESSIBILITY FEATURES.
21. PEDESTRIANS MAY BE DETOURED ONTO PRIVATE PROPERTY ONLY IF WRITTEN PERMISSION FROM THE PROPERTY OWNER IS OBTAINED ALONG WITH DOCUMENTATION INDICATING THAT THE COUNTY WOULD NOT BE LIABLE (HOLD HARMLESS) IN THE EVENT OF AN ACCIDENT.
22. DURING WORK HOURS, AT LEAST ONE WORKER SHALL BE ASSIGNED WITH THE RESPONSIBILITY TO ESCORT ELDERLY, DISABLED OR ANY OTHER PEDESTRIANS IN NEED OF ASSISTANCE THROUGH THE CONSTRUCTION SITE. A WORKER ASSIGNED WITH THIS RESPONSIBILITY MAY ALSO PARTICIPATE IN OTHER CONSTRUCTION ACTIVITIES; HOWEVER, THE ASSIGNED WORKER SHALL BE AWARE OF HIS OR HER RESPONSIBILITIES FOR PROVIDING THIS ASSISTANCE. MEASURES THAT SIMPLY CLOSE THE SIDEWALK, WITH THE EXCEPTION THAT PEDESTRIANS WILL CROSS SOMEWHERE ELSE DOES NOT ADEQUATELY SATISFY PEDESTRIAN ACCESS. PEDESTRIANS SHOULD NEVER BE DIRECTED/ EXPECTED TO CROSS A MULTI-LANE ROADWAY AT ANY LOCATION OTHER THAN AT A SIGNAL (OR ALL-WAY STOP). ACCOMMODATIONS SHOULD BE MADE ON THE SAME SIDE OF ROADWAY AS WORK.

TABLES CHART - MUTCD

Posted Speed	Taper (L) Formula	Buffer Space	Minimum Taper Lengths									Maximum *Cone Spacing			Sign Spacing
			10' Offset			11' Offset			12' Offset						
			L Merge	1/2 L Shift	1/3 L Shoulder	L Merge	1/2 L Shift	1/3 L Shoulder	L Merge	1/2 L Shift	1/3 L Shoulder	@ Taper	@ Tangent	@ Conflict	
25	$L = \frac{WS^2}{60}$	155'	104'	52'	35'	115'	57'	38'	125'	63'	42'	25'	50'	12'	100' - 200'
30		200'	150'	75'	50'	165'	83'	55'	180'	90'	60'	30'	60'	15'	120' - 240'
35		250'	204'	102'	68'	225'	112'	75'	245'	123'	82'	35'	70'	17'	140' - 280'
40		305'	267'	133'	89'	293'	147'	98'	320'	160'	107'	40'	80'	20'	160' - 320'
45	L = WS	360'	450'	225'	150'	495'	248'	165'	540'	270'	180'	45'	90'	22'	360' - 540'
50		425'	500'	250'	167'	550'	275'	183'	600'	300'	200'	50'	100'	25'	400' - 600'
55		495'	550'	275'	183'	605'	303'	202'	660'	330'	220'	55'	110'	27'	440' - 660'
60		570'	600'	300'	200'	660'	330'	220'	720'	360'	240'	60'	120'	30'	480' - 720'
65		645'	650'	325'	217'	715'	358'	238'	780'	390'	260'	65'	130'	32'	520' - 780'
70		730'	700'	350'	233'	770'	385'	257'	840'	420'	280'	70'	140'	35'	560' - 840'

Both are based on.
1.) 85th % Tile or if not available, then use Posted Speed Limit (PSL)

L = Taper Length
S = Speed
W = Width (Offset from path of travel

*Cones shown on the templates are illustration purposes only. Exact number of cones required shall be based on cone spacing, taper lengths, actual field conditions, etc..

CA MUTCD 2012 TABLE 6C-1

MEANING OF LETTER CODES ON TYPICAL APPLICATION DIAGRAMS

ROAD TYPE	DISTANCE BETWEEN SIGNS		
	A	B	C
URBAN (LOW SPEED) - 25 MPH OR LESS	100 FEET	100 FEET	100 FEET
URBAN (LOW SPEED) - MORE THAN 25 MPH TO 40 MPH	250 FEET	250 FEET	250 FEET
URBAN (HIGH SPEED) - MORE THAN 40 MPH	350 FEET	350 FEET	350 FEET
RURAL	500 FEET	500 FEET	500 FEET
EXPRESSWAY / FREEWAY	1,000 FEET	1,500 FEET	2,640 FEET

REVISIONS			
REV.	DESCRIPTION	BY	DATE

PROJECT NO. 13653
DRAWN CAA
DESIGNED BME
CHECKED MAA

DATE
AUGUST 12, 2013

NOTES

- CONTRACTOR SHALL MAINTAIN/PROVIDE ACCESS TO ALL DRIVEWAYS AFFECTED BY THE WORK AREA.
- CONTRACTOR SHALL ASSIGN A WORKER TO ASSIST PEDESTRIANS AROUND WORK AREA.
- MAXIMUM CHANNELIZING DEVICE SPACING FOR ALL SPEEDS ON ONE-LANE/TWO-WAY TAPERS IS 20'.
- MAXIMUM CHANNELIZING DEVICE SPACING FOR ALL SPEEDS ON DOWNSTREAM TAPERS IS 20'.

SYMBOL LEGEND

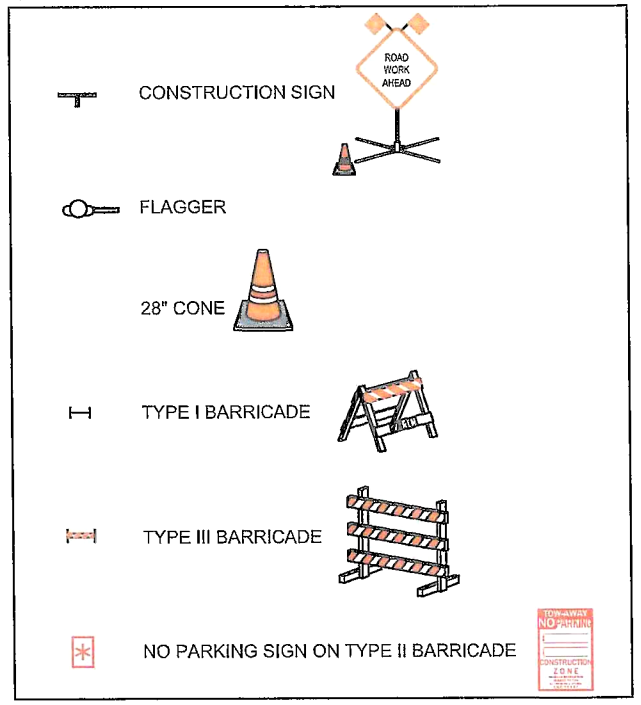

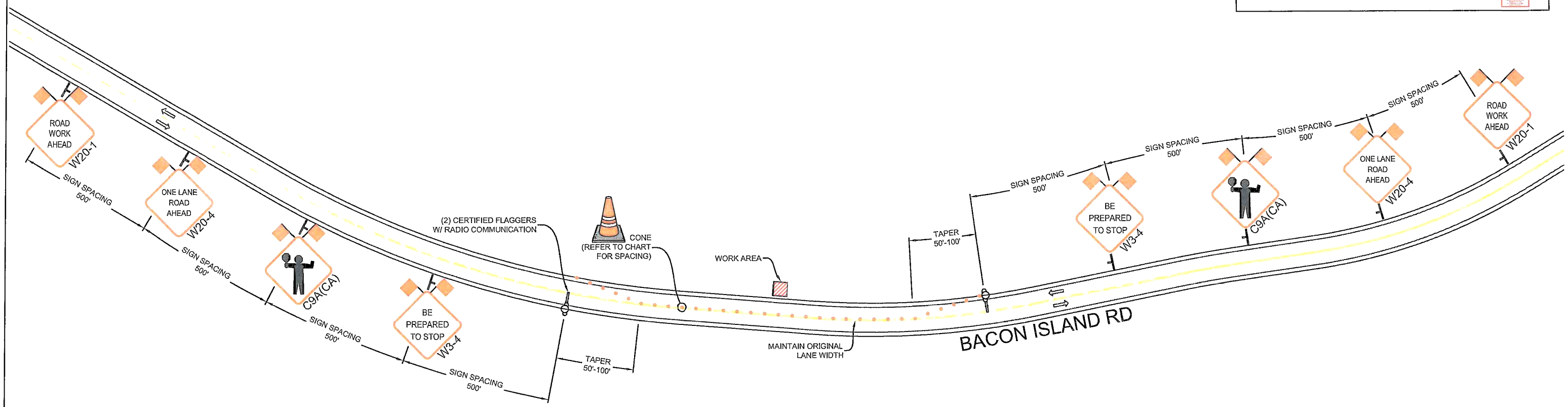

CONST. HOURS: 8:00AM-3:30PM MON-FRI

REVISIONS			
REV.	DESCRIPTION	BY	DATE

PM30950574

ROADS < 50 MPH: MINIMUM 36" SIGN PANELS (48" SIGNS MAY BE USED)

ROADS ≥ 50 MPH: MINIMUM 48" SIGN PANELS

ALMENDARIZ CONSULTING
1136 SUNCAST LN STE 9
EL DORADO HILLS, CA 95762
(888) 306-1211 OFFICE (888) 768-7022 FAX
CA C31 LIC #979806

LOCATION 750 S BACON ISLAND RD, STOCKTON, CA

Pacific Gas and Electric Company

CONTACT MATT GOODWIN
PHONE# (925) 244-3239

PROJECT NO. 13653
DRAWN CAA
DESIGNED BME
CHECKED MAA

DATE
AUGUST 12, 2013

SHEET NO. 3 OF 3